KOHLER Faucets

Rite-Temp®
Valve Body & Cartridge Kit Complete
K-8304-KS

Features
- Includes valve body, pressure balance cartridge, rough-in guide, and mudguard
- 1/2" Universal NPT and direct sweat inlets and outlets with stops (uninstalled kit)
- Service stops include integral check valves
- 5.0 gpm (18.9 lpm) maximum flow rate at 45 psi (3.1 bar)
- Single lever design cycles from off through cold to hot
- Antiscald protection
- One-piece cartridge design simplifies installation and maintenance
- Adjustable high-temperature limit stop to control maximum water temperature
- Requires valve trim to complete installation (sold separately)
- Pressure-balancing diaphragm technology maintains outlet temperature within +/-3°F during water pressure fluctuations

Material
- Forged dezincification-resistant brass body provides long term reliability and resistance to aggressive water conditions

Installation
- Designed for use in standard, back-to-back, and thin wall installations
- Valve body features integral mounting locations and symmetrical valve inlets to simplify installation
- Cartridge is reversible for installations where hot and cold supplies are reversed
- Rough-in guide designed for both standard and thin wall installations
- Installed valve rough-in can be flushed and pressure-tested to 150 psi max (air or water) without cartridge by using test cap (sold separately)

Optional Products/Accessories
K-10350 Deep rough-in kit
K-10351 Test cap for K-8300 Series valve bodies

Codes/Standards
ASME A112.18.1/CSA B125.1
ASSE 1016/ASME A112.1016/CSA B125.16
NOM Standards
NOM 012-CONAGUA

KOHLER® Faucet Lifetime Limited Warranty
See website for detailed warranty information.

KOHLER Faucets

Rite-Temp®

Valve Body & Cartridge Kit Complete

K-8304-KS

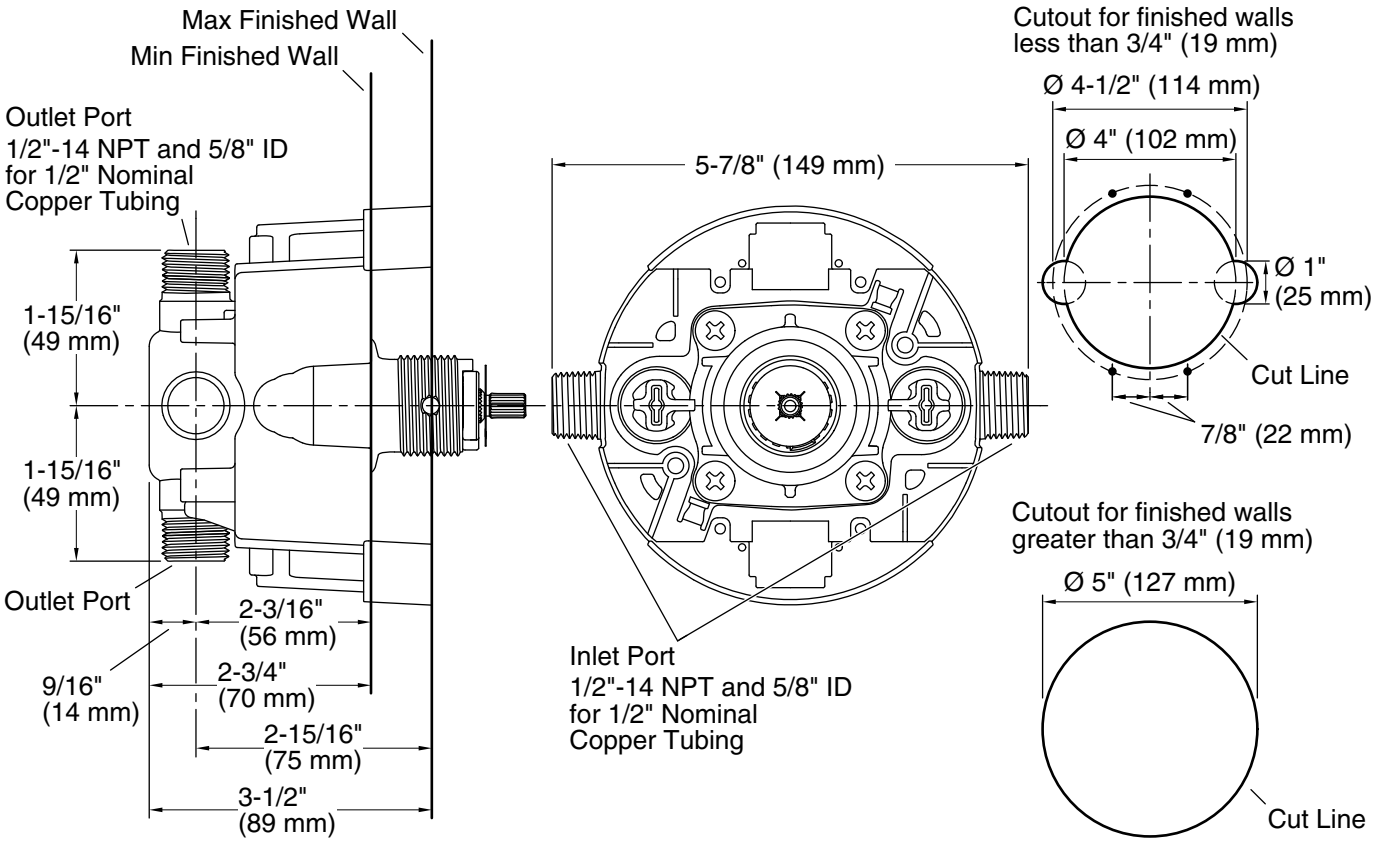

Technical Information

All product dimensions are nominal.

Spout:

Shower Valve:

Flow Rate (Max) @ 45 psi	5 gal/min (18.9 l/min)
Pressure:	45 psi (3.1 bar)
Maximum (Static) Pressure:	125 psi (8.6 bar)
Minimum (Operating) Pressure:	20 psi (1.4 bar)

Notes

Install this product according to the installation guide.

For use with showerheads or handsprays rated at 0 gal/min (0 l/min) or higher.

Avoid cross-flow conditions. Do not install shut-off device on either valve outlet.

Cap the shower outlet if deck-mount spout, diverter, or handshower is connected to the spout outlet.

Install straight pipe or tube drop of 7" (178 mm) to 18" (457 mm) with single elbow between the valve and wall-mount spout.

For finished walls greater than 3/4" (19 mm) and less than 1-1/2" (38 mm), install support(s) 2" (51 mm) from the stud face.

For finished walls greater than 1-1/2" (38 mm), install support(s) 3" (76 mm) from the face of the finished wall.